Current part is item (16) on diagram. Available at www.oshkoshequipment.com


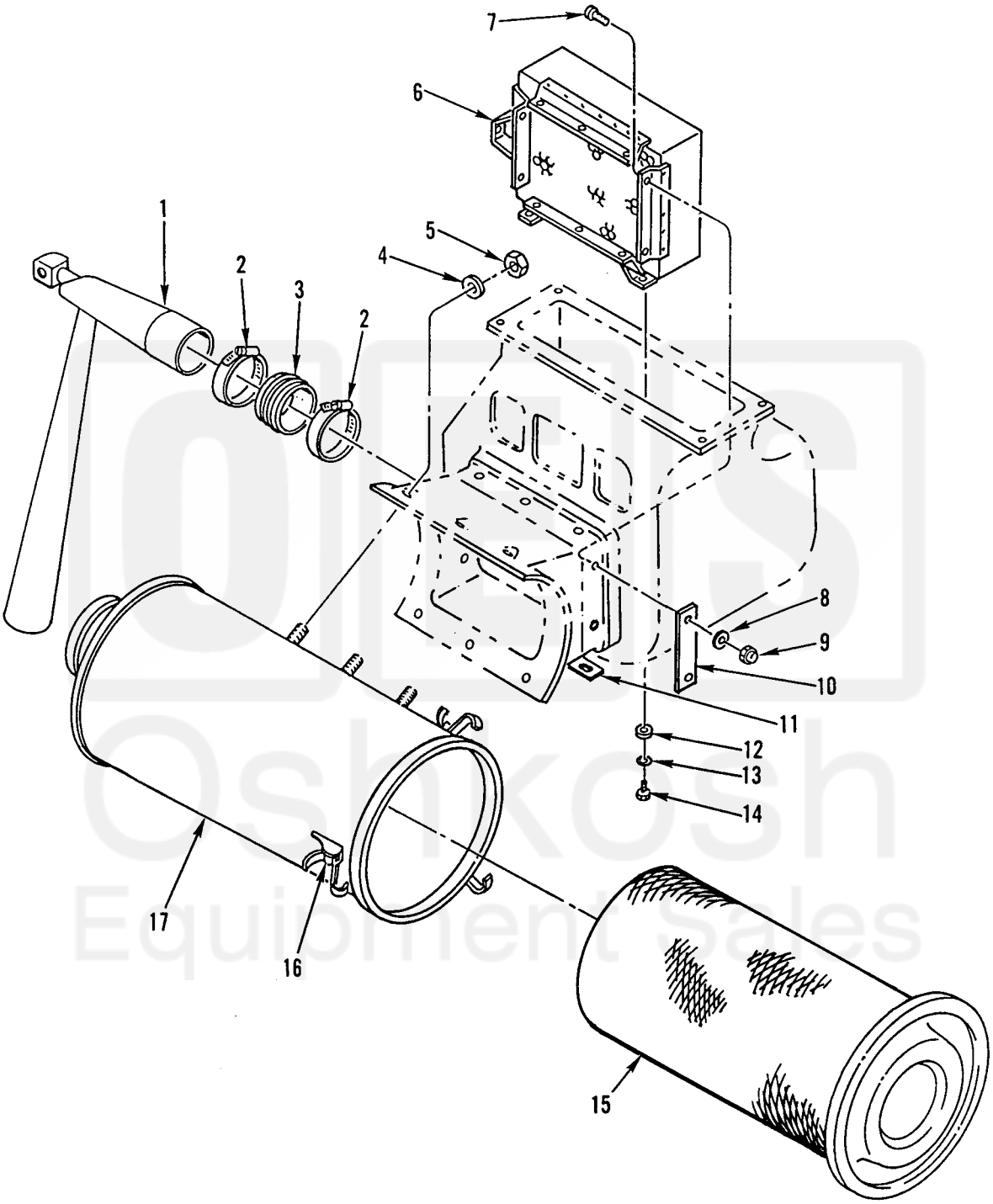


Figure 34. Air Cleaner Assembly

Current part is item (16) on diagram. Available at www.oshkoshequipment.com

Current part is item (16) on diagram. Available at www.oshkoshequipment.com


| (1) ITEM NO | (2) SMR CODE | (3) NSN | (4) CAGEC | (5) PART NUMBER | (6) DESCRIPTION AND USABLE ON CODES(UOC) | (7) QTY |
|---|---|---|---|---|---|---|
| | | | | | GROUP 0304 AIR CLEANER | |
| | | | | | FIG. 34 AIR CLEANER ASSEMBLY | |
| 1 | PFOZZ | 4710013326121 | 18265 | P52-6745 | TUBE ASSEMBLY,METAL..... | 1 |
| 2 | PFOZZ | 4730002417651 | 35871 | 225-40 | CLAMP,HOSE..... | 2 |
| 3 | MOOZZ | | 18265 | P52-6738 | COUPLING ASSEMBLY,T MAKE FROM CAGE 24161, PN 24032..... | 1 |
| 4 | PFOZZ | 5310000814219 | 96906 | MS27183-12 | WASHER,FLAT .344 ID X .688 OD X .065 THK..... | 6 |
| 5 | PFOZZ | 5310000881251 | 81349 | M45913/1-4CG5C | NUT,SELF-LOCKING,HE 1/4-20UNC..... | 6 |
| 6 | PFOZZ | 2940013330723 | 18265 | P549007 | FILTER ELEMENT,INTA..... | 1 |
| 7 | PAOZZ | 5305013469416 | 18265 | P52-6822 | SCREW,MACHINE..... | 10 |
| 8 | PAOZZ | 5310013483195 | 18265 | P52-6823 | WASHER,FLAT..... | 10 |
| 9 | PAOZZ | 5310013477051 | 18265 | P52-6824 | NUT,SELF-LOCKING,HE..... | 10 |
| 10 | PFOZZ | 5340013469471 | 18265 | P52-6817 | FRAME,AIR INLET-OUT..... | 2 |
| 11 | PFOZZ | 5340013469470 | 18265 | P52-6816 | FRAME,AIR INLET-OUT..... | 2 |
| 12 | PAOZZ | 5310013326518 | 18265 | P52-6152 | WASHER,FLAT .219 ID X 1.00 OD X .060 THK..... | 3 |
| 13 | PAOZZ | 5310013327278 | 18265 | P52-6151 | WASHER,LOCK NO. 12UNC..... | 3 |
| 14 | PAOZZ | 5305013326506 | 18265 | P52-6150 | SCREW,TAPPING 12-24UNC X 1/2..... | 3 |
| 15 | PAOZZ | 2940015142457 | 18265 | P548796 | FILTER ELEMENT,INTA..... | 1 |
| 16 | PAOZZ | 5342008331236 | 19207 | 11602023 | LATCH,INTAKE AIR CL..... | 1 |
| 17 | PAOZZ | 2940013330720 | 18265 | ECG11-2530 | AIR CLEANER,INTAKE..... | 1 |

END OF FIGURE



Current part is item (16) on diagram. Available at www.oshkoshequipment.com